REV.	DESCRIPTION	APPORVED	DATE	ECN

NOTES: (UNLESS OTHERWISE SPECIFIED)

1. The inferface comply with IEC 169-9.
2. Part must be packaged to avoid any damages during transportation.

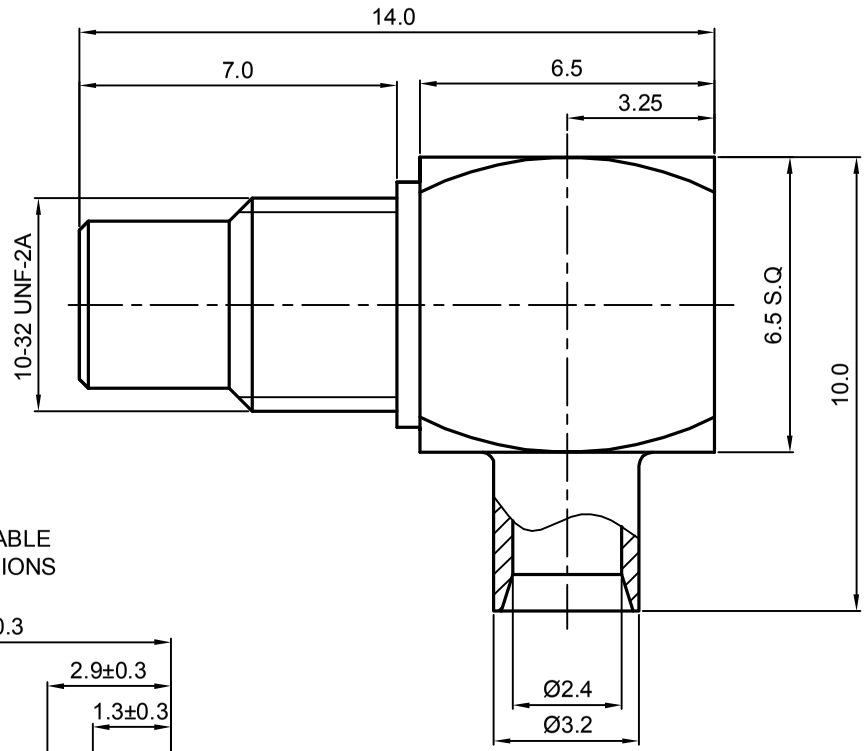

RECOMMENDED CABLE STRIPPING DIMENSIONS

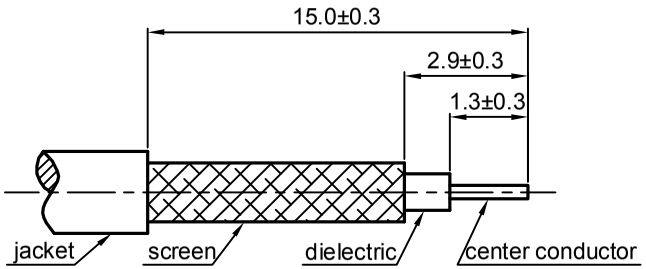

1.6

MATERIAL
SEE BOM FOR DETAILS

FINISH
SEE BOM FOR DETAILS

Plating part to be touched by gloves
Dimension apply before plating
XXX - measuring point for plating

SURFACE	VOLUME

TOLERANCES

0place	X	±1
1place	.X	±0.1
2place	.XX	±0.05
Angle		±5°

Remove burrs and sharp edges

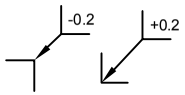

THIRD ANGLE PROJECTION

GENERAL ECCENTRICITY 0.06

	NAME	DATE
DRAWN BY	Colin	25Aug08
CHECKED BY		
APPROVED BY		

NOTICE: Those drawings and specifications are the property of ZEETEQ CORPORATION and used only for the specify purpose authorised by ZEETEQ

Zeeteq

TITLE
SMC, PLUG,CABLE

DWG NO.
5314.SMC.PRC.02.111

REV.
S1

SCALE 6:1 | DO NOT SCALE DRAWING | SIZE A4 | SHEET 1 of 1