REV.	DESCRIPTION	APPORVED	DATE	ECN

NOTES: (UNLESS OTHERWISE SPECIFIED)

1. The inferface comply with IEC 169-9.
2. Part must be packaged to avoid any damages during transportation.
3. After crimping dimesion should be SW3.25

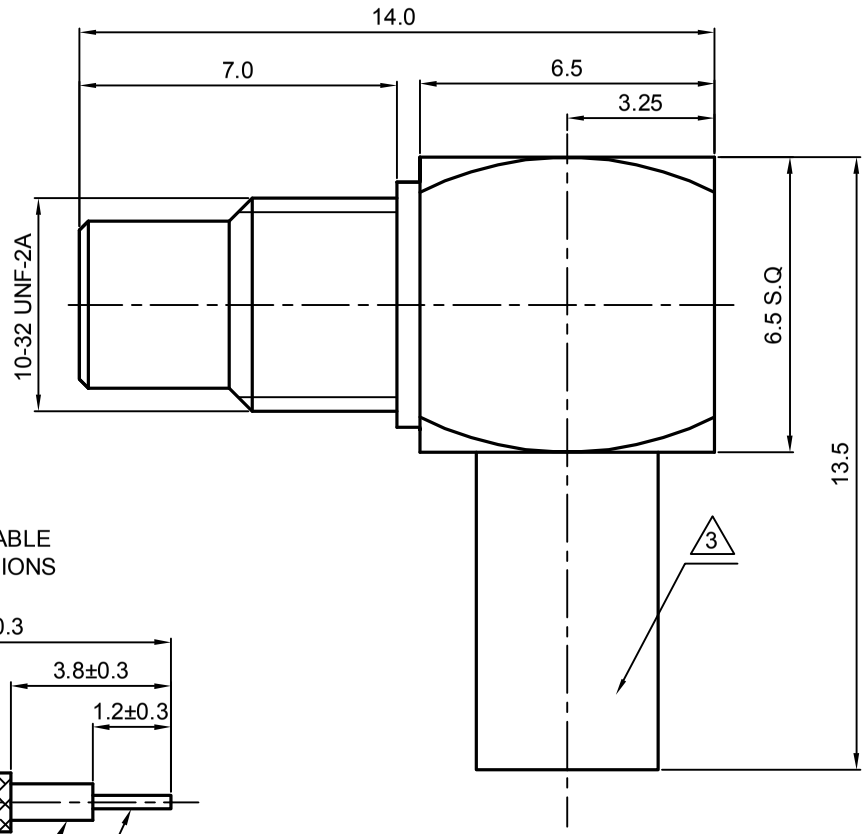

RECOMMENDED CABLE
STRIPPING DIMENSIONS

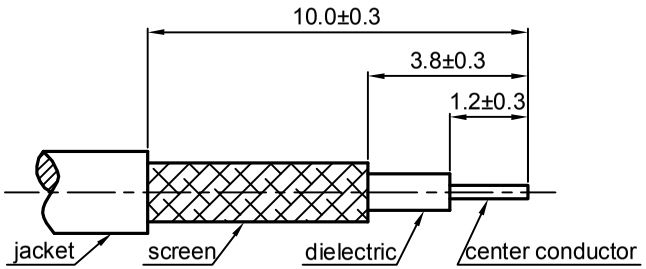

1.6

MATERIAL	TOLERANCES	THIRD ANGLE PROJECTION
SEE BOM FOR DETAILS	0place X ±1 1place .X ±0.1 2place .XX ±0.05 Angle ±5°	GENERAL ECCENTRICITY 0.06
FINISH SEE BOM FOR DETAILS	Remove burrs and sharp edges -0.2 +0.2	
Plating part to be touched by gloves		
Dimension apply before plating		
XXX - measuring point for plating		
SURFACE / VOLUME		

	NAME	DATE
DRAWN BY	Colin	01Sep08
CHECKED BY		
APPROVED BY		

NOTICE: Those drawings and specifications are the property of ZEETEQ CORPORATION and used only for the specify purpose authorised by ZEETEQ

Zeeteq

TITLE
SMC, PLUG,CABLE

DWG NO. 5316.SMC.PRC.06.111

REV. S1

SCALE 6:1 | DO NOT SCALE DRAWING | SIZE A4 | SHEET 1 of 1