REV.	DESCRIPTION	APPORVED	DATE	ECN

NOTES: (UNLESS OTHERWISE SPECIFIED)

1. Interface according to IEC 169-4
2. With a protective cap.
3. Part must be packaged to avoid any damages during transportation.

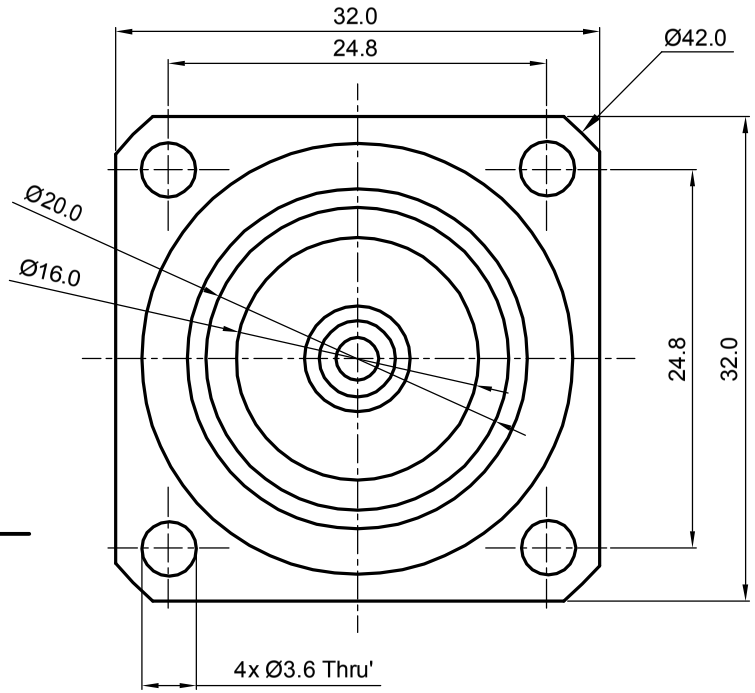

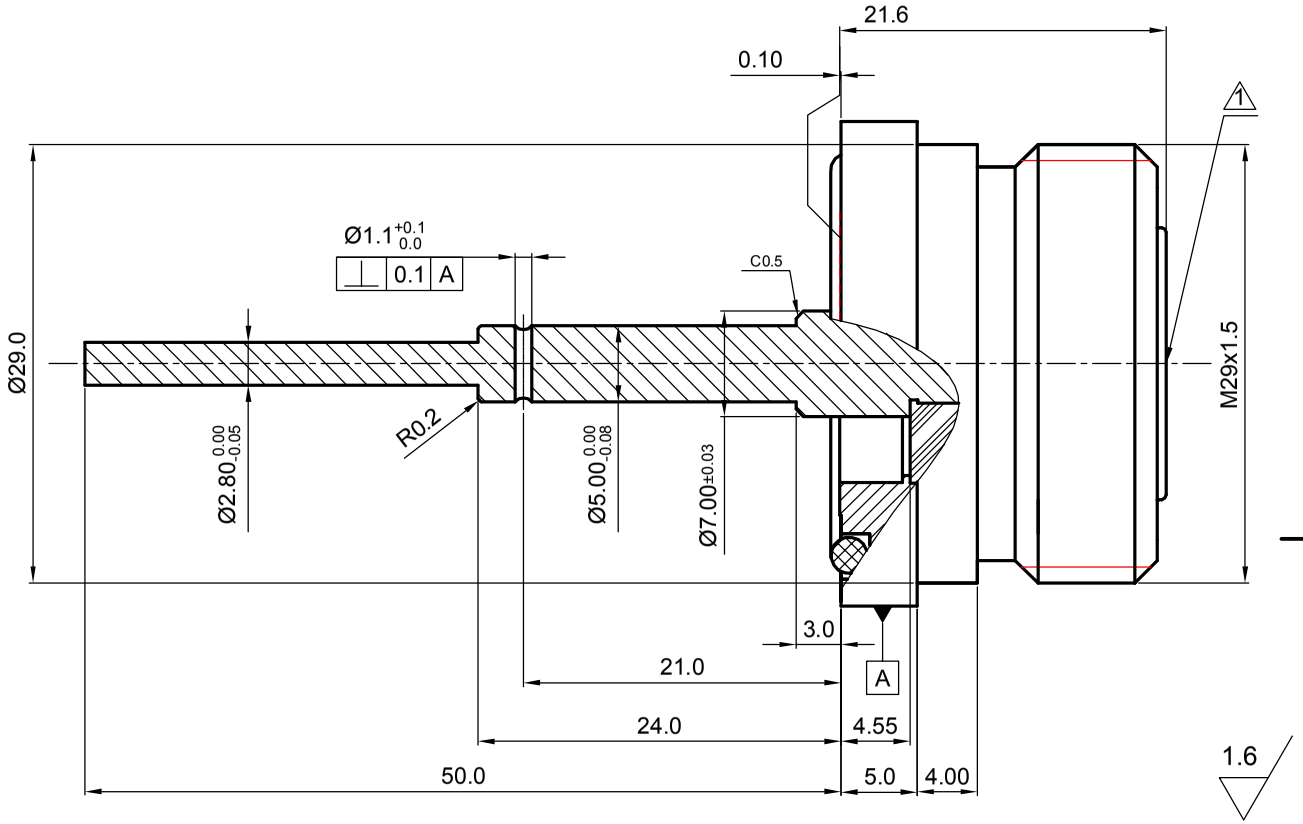

MATERIAL	TOLERANCES	THIRD ANGLE PROJECTION	Zeeteq
SEE BOM	0place X ±1 1place .X ±0.1 2place .XX ±0.05 Angle ±5°	GENERAL ECCENTRICITY 0.06	
FINISH: SEE BOM	Remove burrs and sharp edges (-0.1, +0.1)	NAME / DATE	TITLE: 7/16,JACK,FLANGE
Plating part to be touched by gloves		DRAWN BY: Colin 02Nov07	
Dimension apply before plating		CHECKED BY	DWG NO.: 6094.716.JSF.00.230
XXX - measuring point for plating		APPROVED BY	REV.: S1
SURFACE / VOLUME	**NOTICE:** Those drawings and specifications are the property of ZEETEQ CORPORATION and used only for the specify purpose authorised by ZEETEQ		SCALE 2:1 / DO NOT SCALE DRAWING / SIZE A4 / SHEET 1 of 1