REV.	DESCRIPTION	APPORVED	DATE	ECN
A	Rel to production	Johnny	21Sep07	

NOTES: (UNLESS OTHERWISE SPECIFIED)

1. Mating according to IEC169-16.
2. With a protective cap.
3. Part must be packaged to avoid any damages during transportation.

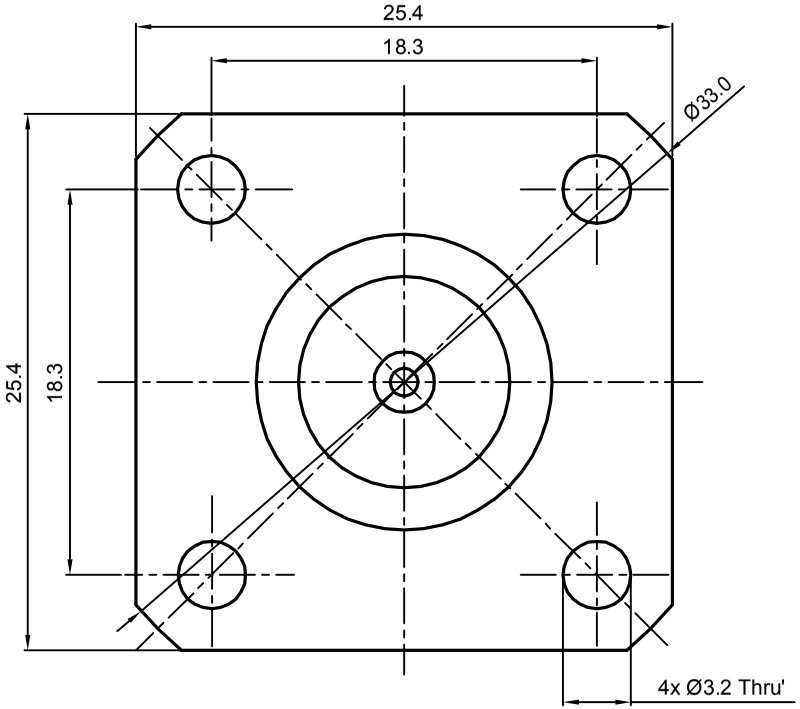

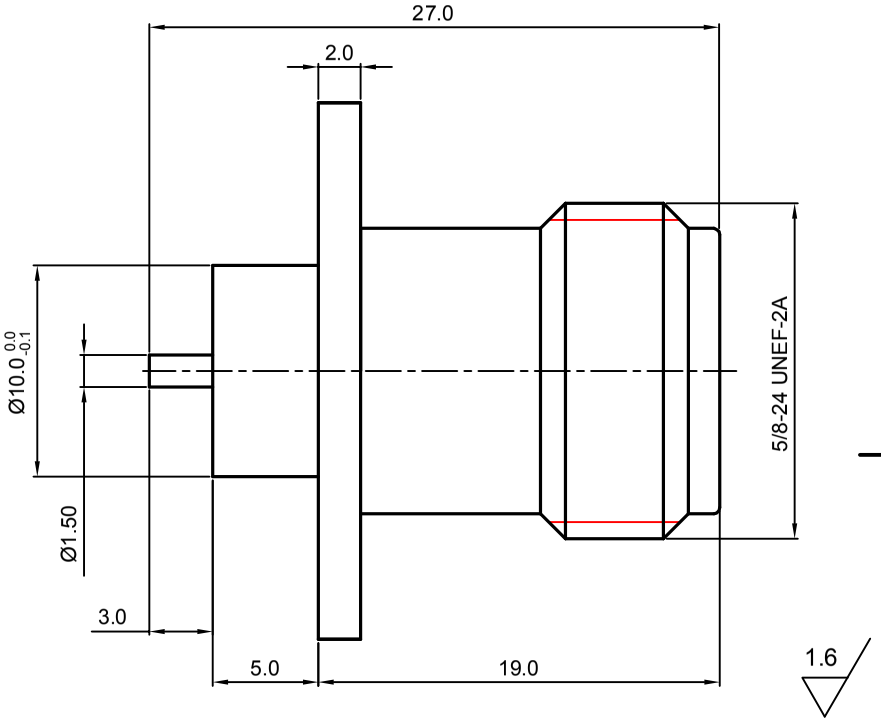

MATERIAL: SEE BOM	TOLERANCES: 0place X ±1; 1place .X ±0.1; 2place .XX ±0.05; Angle ±5°	THIRD ANGLE PROJECTION; GENERAL ECCENTRICITY 0.06	Zeeteq
FINISH: SEE BOM	Remove burrs and sharp edges (-0.1, +0.1)		TITLE: N,JACK,FLANGE
Plating part to be touched by gloves		DRAWN BY: Colin 06Aug07	
Dimension apply before plating		CHECKED BY: Joy Zhou 06Aug07	DWG NO. 6023.N.JSF.00.230
XXX - measuring point for plating		APPROVED BY: Johnny 06Aug07	REV. A
SURFACE / VOLUME	NOTICE: Those drawings and specifications are the property of ZEETEQ CORPORATION and used only for the specify purpose authorised by ZEETEQ		SCALE 3:1 / DO NOT SCALE DRAWING / SIZE A4 / SHEET 1 of 1