REV.	DESCRIPTION	APPORVED	DATE	ECN

NOTES: (UNLESS OTHERWISE SPECIFIED)

1. Interface comply with IEC 169-15.
2. Part must be packaged to avoid any damaged during transportation.
3. After crimping dimension should be AF/SW 2.67.

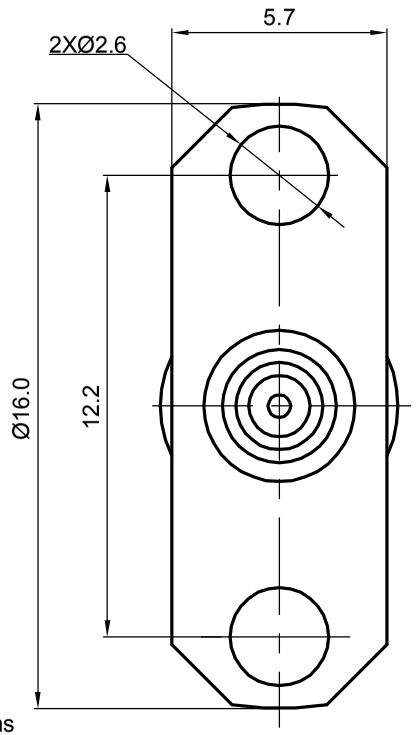

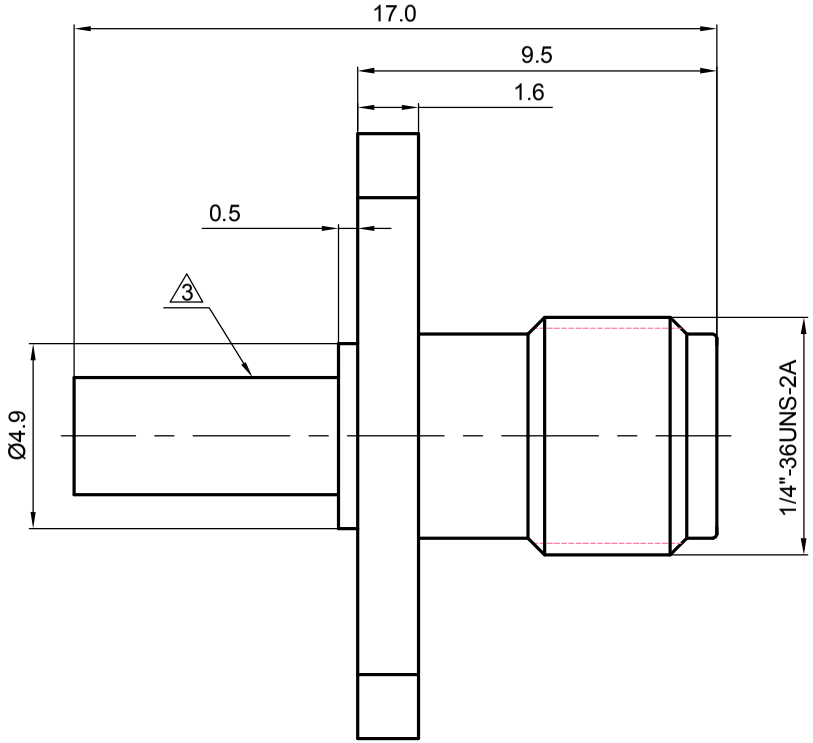

Recommended cable stripping dims

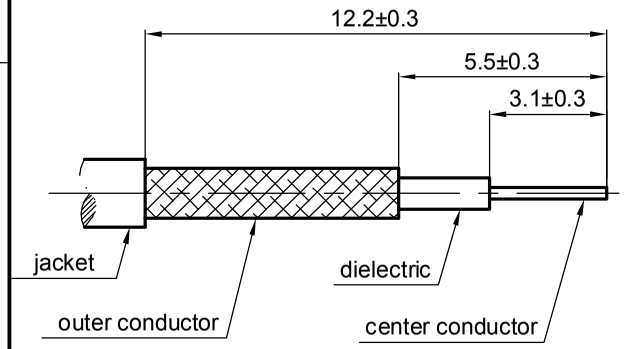

1.6

MATERIAL	TOLERANCES	THIRD ANGLE PROJECTION	Zeeteq
SEE BOM OF DETAILS	0place X ±1 1place .X ±0.1 2place .XX ±0.05 Angle ±5°	GENERAL ECCENTRICITY 0.06	
FINISH SEE BOM OF DETAILS	Remove burrs and sharp edges -0.2 +0.2	NAME / DATE DRAWN BY Danny.D 20Nov07 CHECKED BY APPROVED BY	TITLE SMA,JACK,CABLE
Plating part to be touched by gloves Dimension apply before plating XXX - measuring point for plating			DWG NO. 5163.SMA.JSC.05.111 REV. S1
SURFACE / VOLUME	**NOTICE:** Those drawings and specifications are the property of ZEETEQ CORPORATION and used only for the specify purpose authorised by ZEETEQ		SCALE 5:1 · DO NOT SCALE DRAWING · SIZE A4 · SHEET 1 of 1